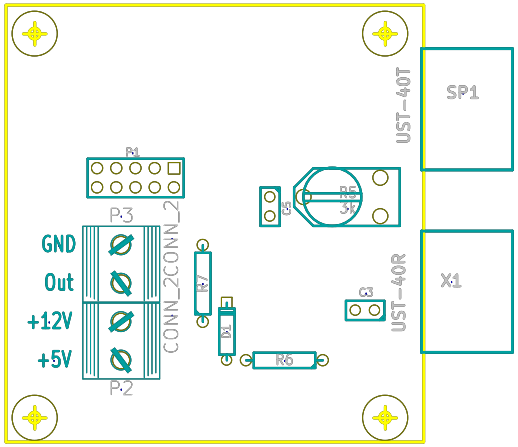

Ultraschall Receiver Board with RS232 TTL Connector (2400Baud)

Björn Hempel

File: ultraschall.brd

Sheet: 1/1

Title: Ultraschall Receiver

Size: A4	Date: 15 feb 2009	**Rev: 1.0**
KiCad E.D.A. pcbnew (2010-05-05 BZR 2356)-stable		Id: 1/1